REVISIONS			
REV	DESCRIPTION	DATE	APPROVED
XX	XXXXXXXXXXXXXXXXXXXXXXXXXXXXXXXXXXXXXXXX	MO/DY/YR	XXX

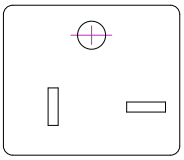

PIN AT TOP-OPTIONAL CONFIGURATION

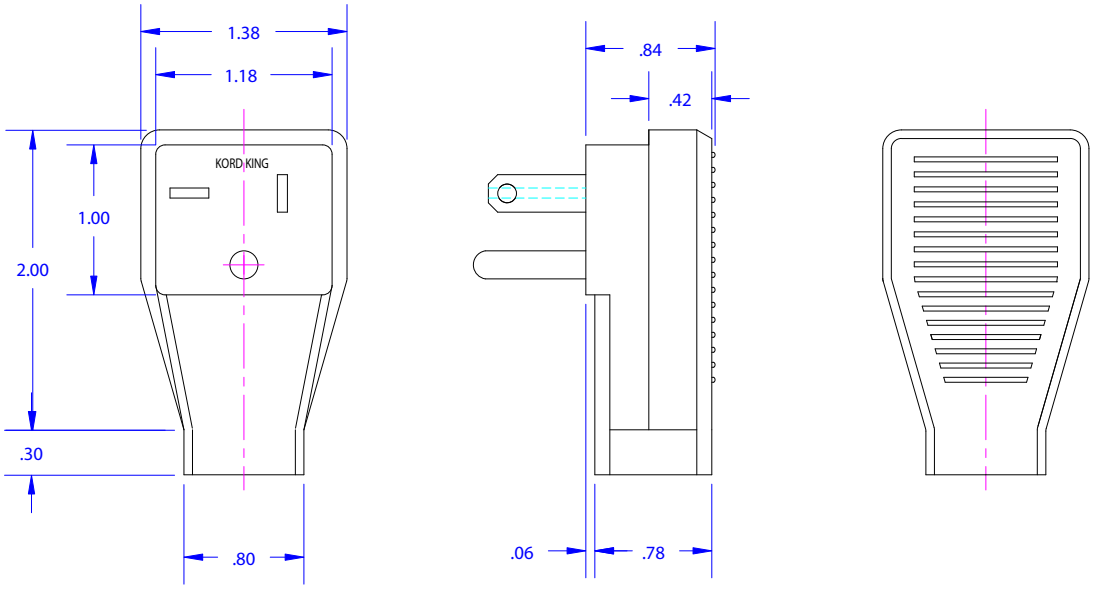

PROPRIETARY INFORMATION
KORD KING, INC.
ALL RIGHTS RESERVED

THIS DOCUMENT CONTAINS CONFIDENTIAL AND PROPRIETARY INFORMATION OF KORD KING AND IT'S RECEIPT OR POSSESSION DOES NOT CONVEY ANY RIGHTS TO REPRODUCE, DISCLOSE IT'S CONTENTS, OR TO MANUFACTURE, USE OR SELL ANYTHING IT MAY DESCRIBE. REPRODUCTION, DISCLOSURE, OR USE WITHOUT SPECIFIC WRITTEN AUTHORIZATION OF KORD KING IS STRICTLY FORBIDDEN.

TOLERANCES
FRACTIONAL ± 1/8
2 PLACE DEC. ± 0.060
3 PLACE DEC. ± 0.030

MATERIAL SPEC
MAT'L:
GRADE:
THICK:

KORD KING, INC.

PLUG, RIGHT ANGLE
6-20P

SIZE	FSCM NO.	DWG NO.	REV
A		KK15000-6-20	XX

SCALE	NONE	DRAWN BY: DATE DWN:	SHEET	1 OF 1