REVISIONS			
REV	DESCRIPTION	DATE	APPROVED
XX	XXXXXXXXXXXXXXXXXXXXXXXXXXXXXXXXXXXXXXXX	MO/DY/YR	XXX

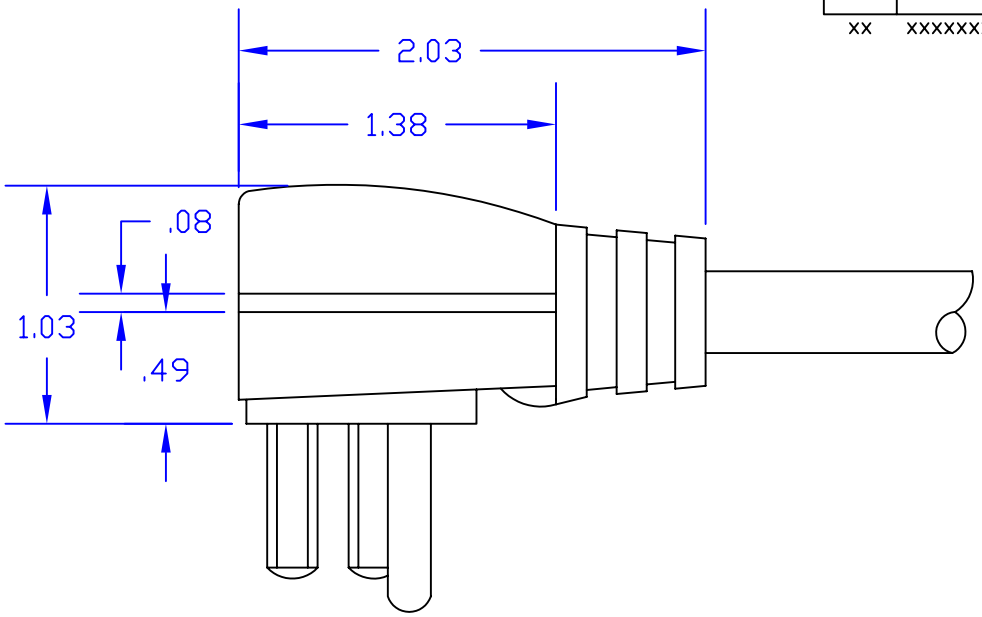

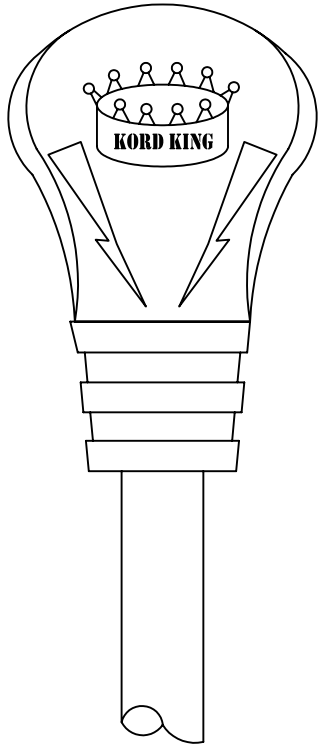

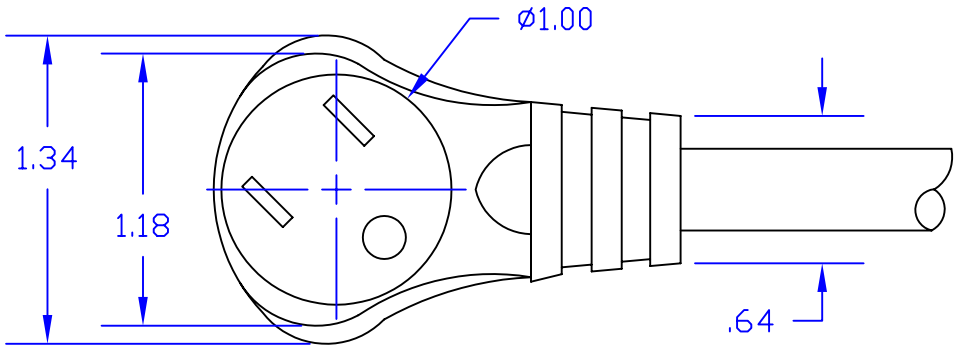

PROPRIETARY INFORMATION
KORD KING, INC.
ALL RIGHTS RESERVED
THIS DOCUMENT CONTAINS CONFIDENTIAL AND PROPRIETARY INFORMATION OF KORD KING AND IT'S RECEIPT OR POSSESSION DOES NOT CONVEY ANY RIGHTS TO REPRODUCE, DISCLOSE IT'S CONTENTS, OR TO MANUFACTURE, USE OR SELL ANYTHING IT MAY DESCRIBE. REPRODUCTION, DISCLOSURE, OR USE WITHOUT SPECIFIC WRITTEN AUTHORIZATION OF KORD KING IS STRICTLY FORBIDDEN.

TOLERANCES
AS NOTED

MATERIAL SPEC

KORD KING, INC.

5–15 RA 225°
PLUG

SIZE	FSCM NO.	DWG NO.	REV
A		KK19000–ORA–225	XX
SCALE NONE	DRAWN BY: NICK DATE DWN: 5/18/05	SHEET 1 OF 1	