REVISIONS			
REV	DESCRIPTION	DATE	APPROVED
XX	XXXXXXXXXXXXXXXXXXXXXXXXXXXXXXXXXXXXXXXX	MO/DY/YR	XXX

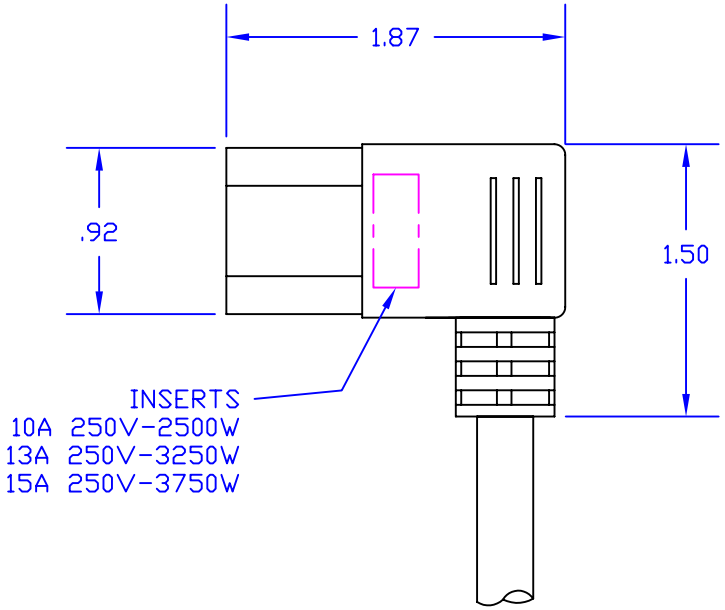

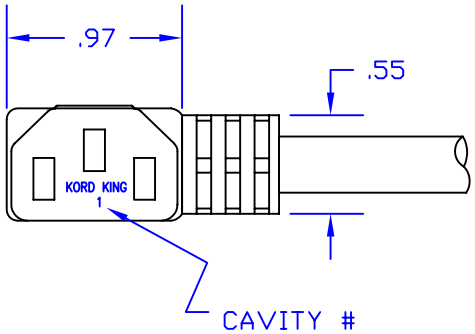

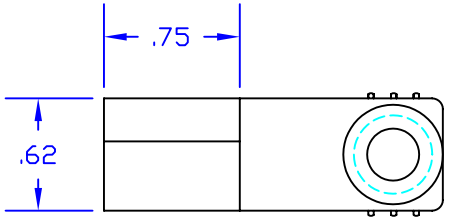

PROPRIETARY INFORMATION
KORD KING, INC.
ALL RIGHTS RESERVED
THIS DOCUMENT CONTAINS CONFIDENTIAL AND PROPRIETARY INFORMATION OF KORD KING AND IT'S RECEIPT OR POSSESSION DOES NOT CONVEY ANY RIGHTS TO REPRODUCE, DISCLOSE IT'S CONTENTS, OR TO MANUFACTURE, USE OR SELL ANYTHING IT MAY DESCRIBE. REPRODUCTION, DISCLOSURE, OR USE WITHOUT SPECIFIC WRITTEN AUTHORIZATION OF KORD KING IS STRICTLY FORBIDDEN.

TOLERANCES

MATERIAL SPEC
PLUG: PVC

KORD KING, INC.

IEC 320 C13 LTA

SIZE	FSCM NO.	DWG NO.	REV
A		KK10000-C13LTA	XX
SCALE NONE	DRAWN BY: NICK DATE DWN: 3/19/09	SHEET 1 OF 1	